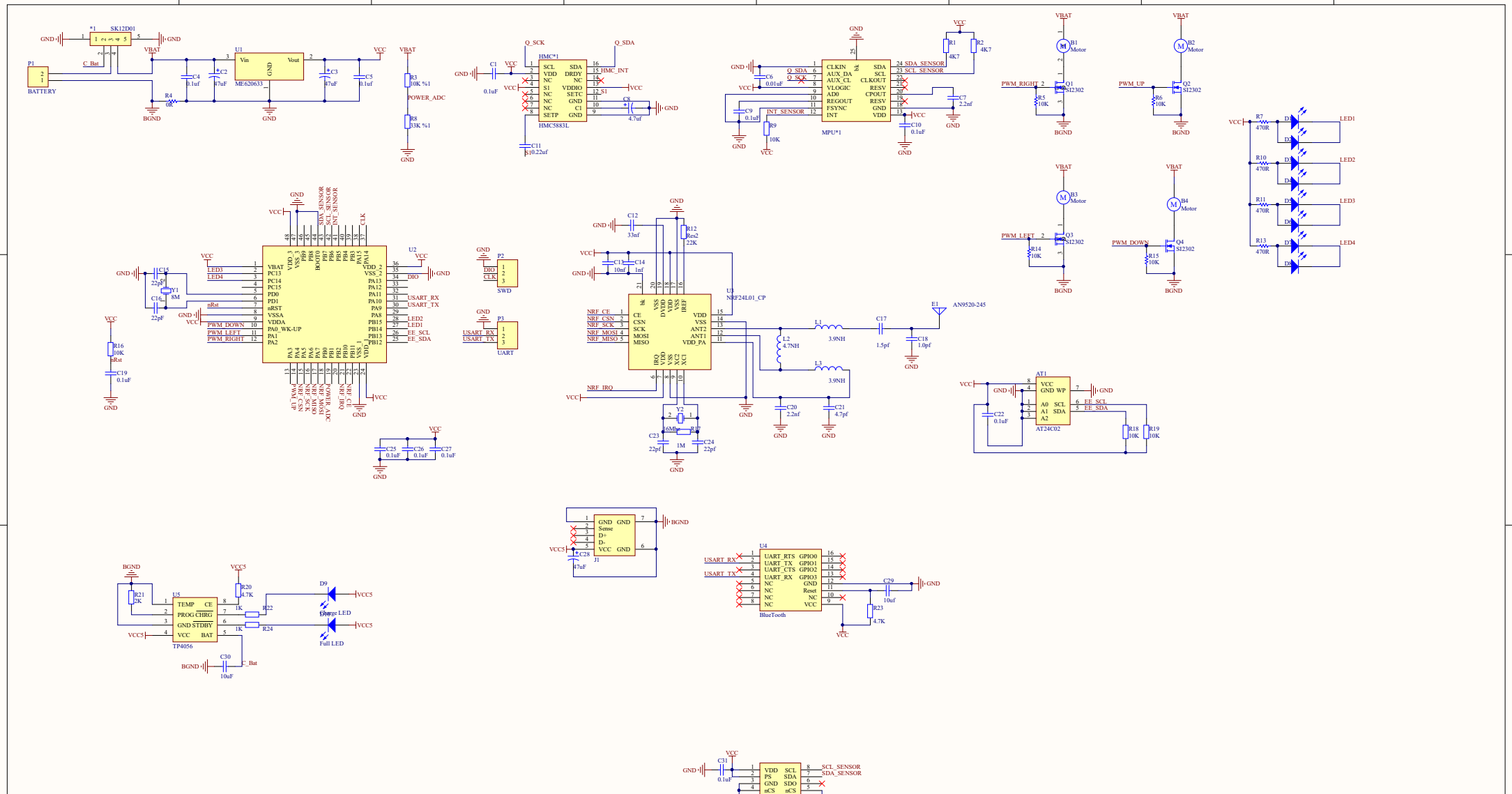

Title: BF Status By Mfweb Bi Fang Electronic Technology CO.,LTD		
Size A2	Number	Revision V0.1
Date: 2016/9/4		Sheet of
File: G:\单片机\项目\\飞控.SchDoc		Drawn By: Mfweb